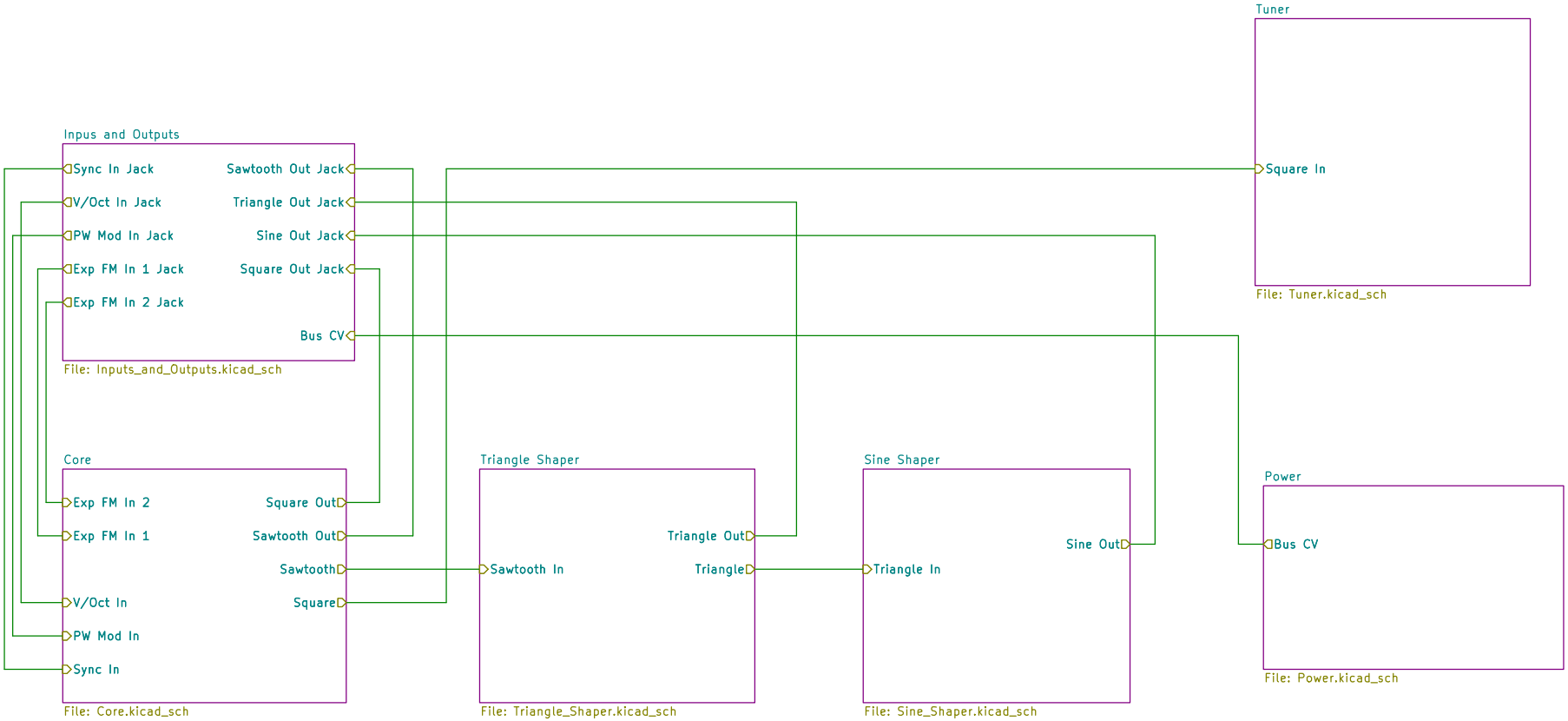

DMH Instruments

Sheet: /
File: DMH_VCO_40106_PCB.kicad_sch

Title: VCO 40106 PCB

Size: A4	Date: 2024-06-16	**Rev: 1**
KiCad E.D.A. 9.0.7		Id: 1/7

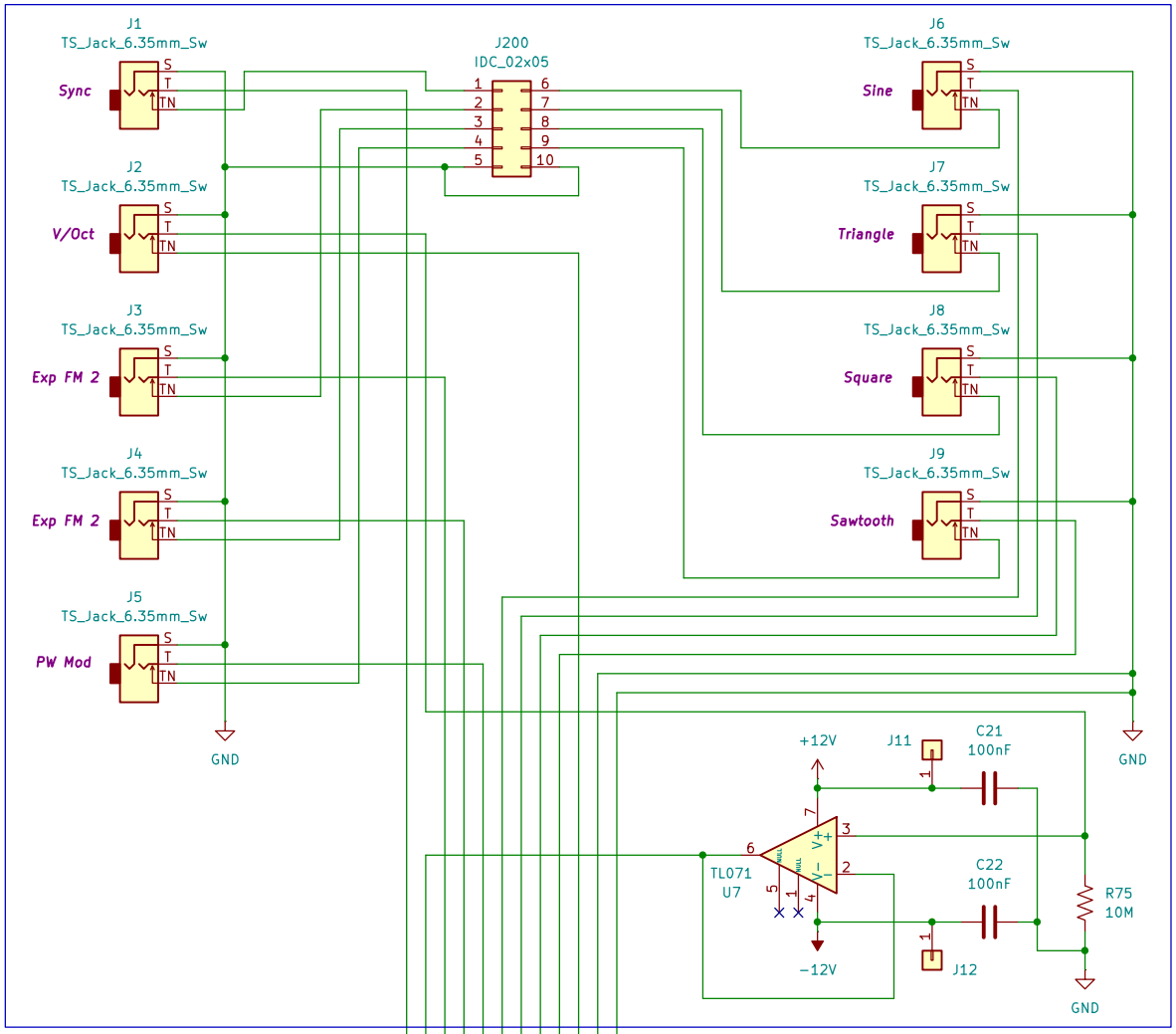

Not placed in main PCB. See "DMH_VCO_40106_PCB_Connectors" project.

This version of the Connectors PCB requires jumper wires to bring power supply to the OpAmp from the main PCB.
Jumper wires with a socket on one end are recommended in order to prevent accidental short-circuits.

+12V:
- solder the bare wire end to the Cathode (K marked terminal) of D14
- connect the socketed end to J11

−12V:
- solder the bare wire end to the Anode (non-K marked terminal) of D13
- connect the socketed end to J12

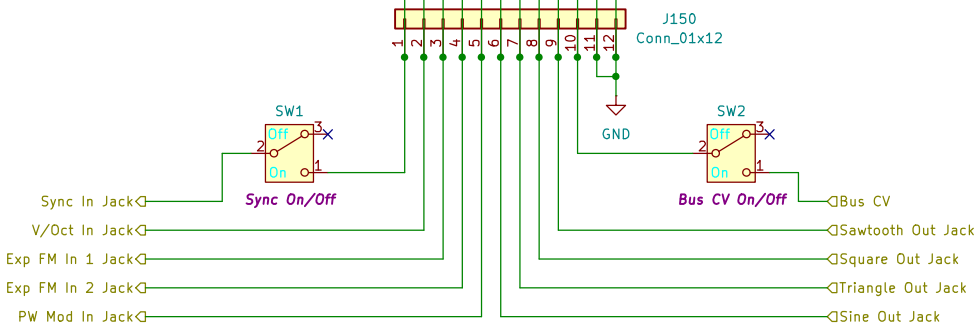

DMH Instruments

Sheet: /Inpus and Outputs/
File: Inputs_and_Outputs.kicad_sch

Title:

Size: A4	Date:	Rev:
KiCad E.D.A. 9.0.7		Id: 2/7

RD90 pots pinout:
when viewing the pot from above and the pins are on the south side,
1 = left = fully CCW
2 = middle
3 = right = fully CW

Cermet trimpots pinout:
when viewing the trimpot from above,
1 = left = fully CCW
2 = middle
3 = rigth = fully CW

Had to reduce R42 to 75k by soldering 300k in parallel in some builds.
This allows VCO to be tuned to C1 (32.7Hz) when Coarse pot is full CCW
and Fine pot is at 12 o'clock.

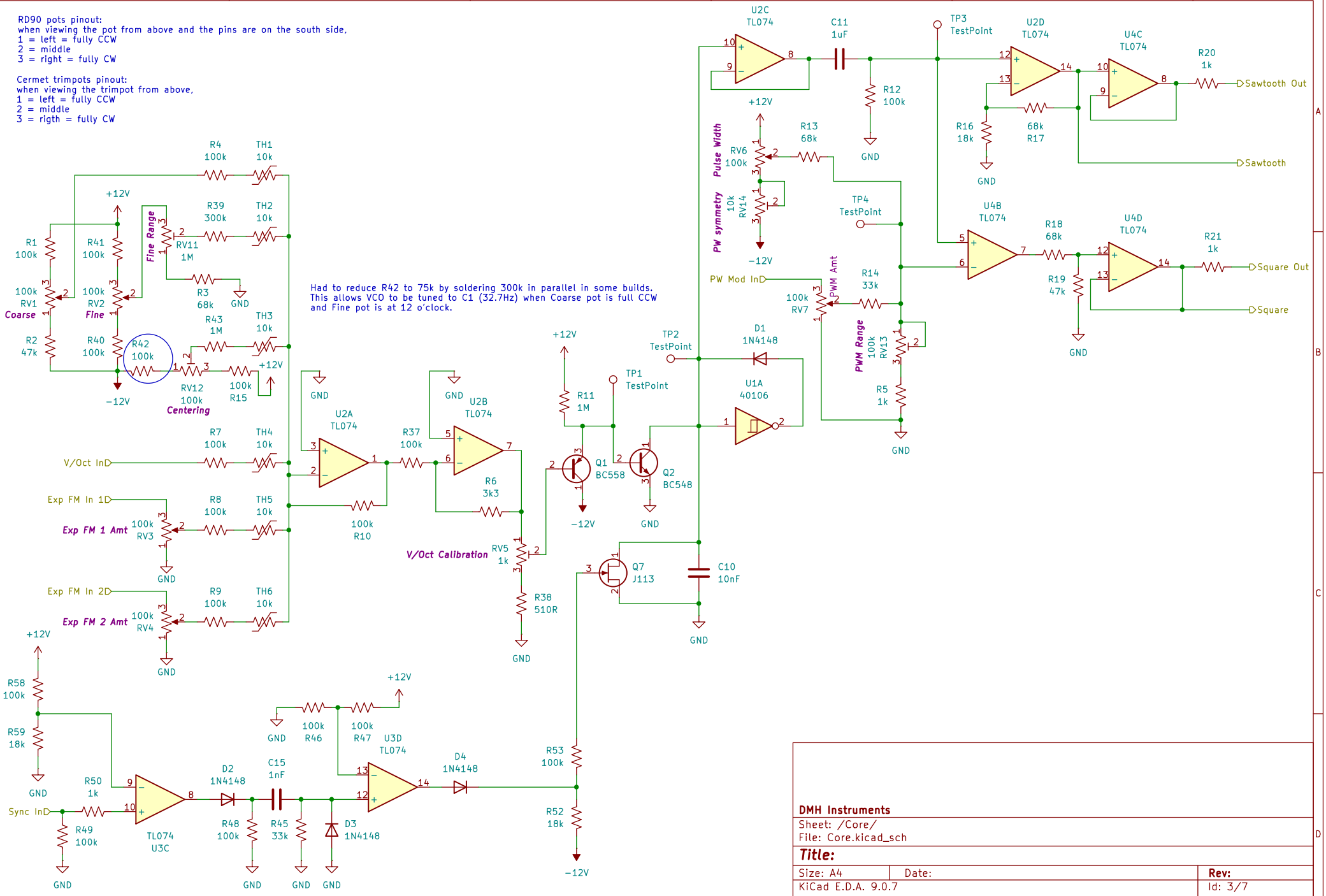

DMH Instruments

Sheet: /Core/
File: Core.kicad_sch

Title:

Size: A4	Date:	Rev:
KiCad E.D.A. 9.0.7		Id: 3/7

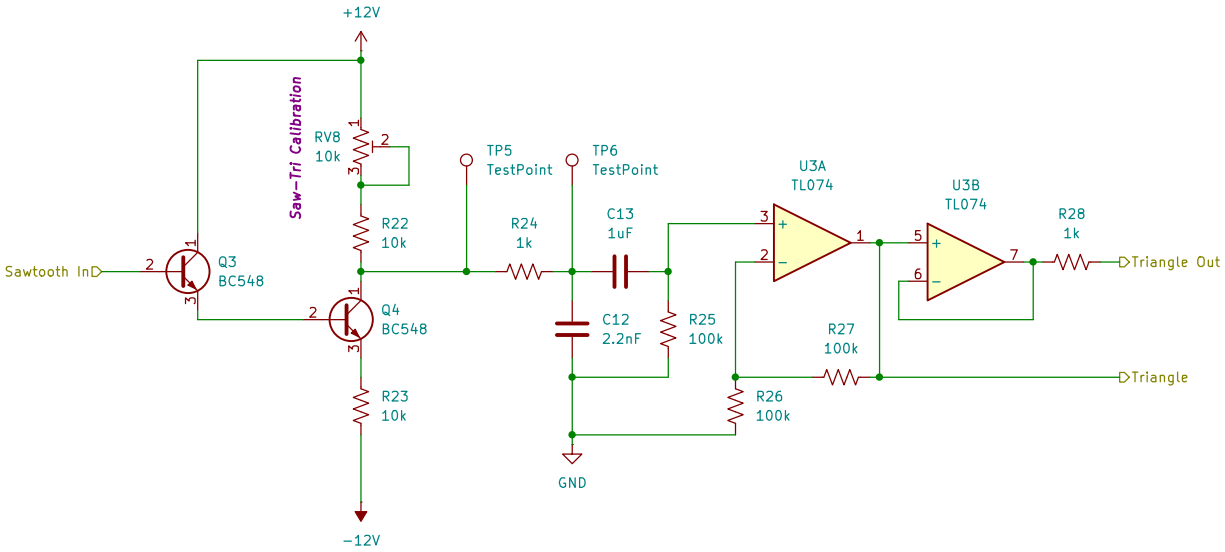

DMH Instruments

Sheet: /Triangle Shaper/
File: Triangle_Shaper.kicad_sch

Title:

Size: A4	Date:	Rev:
KiCad E.D.A. 9.0.7		Id: 4/7

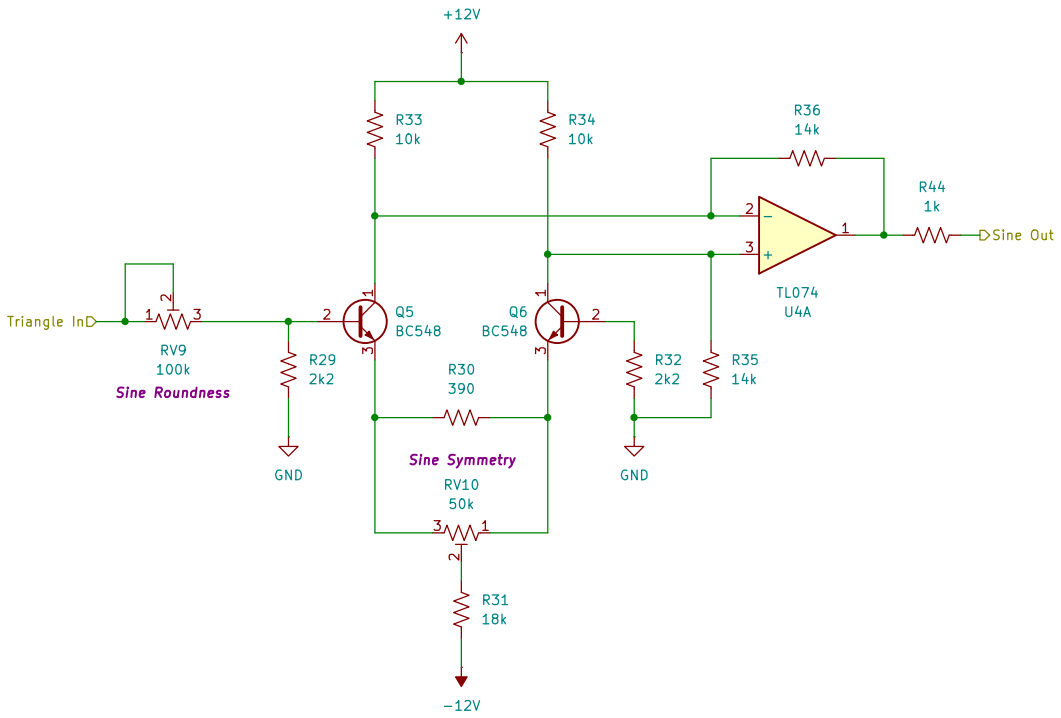

DMH Instruments

Sheet: /Sine Shaper/
File: Sine_Shaper.kicad_sch

Title:

Size: A4	Date:	Rev:
KiCad E.D.A. 9.0.7		Id: 5/7

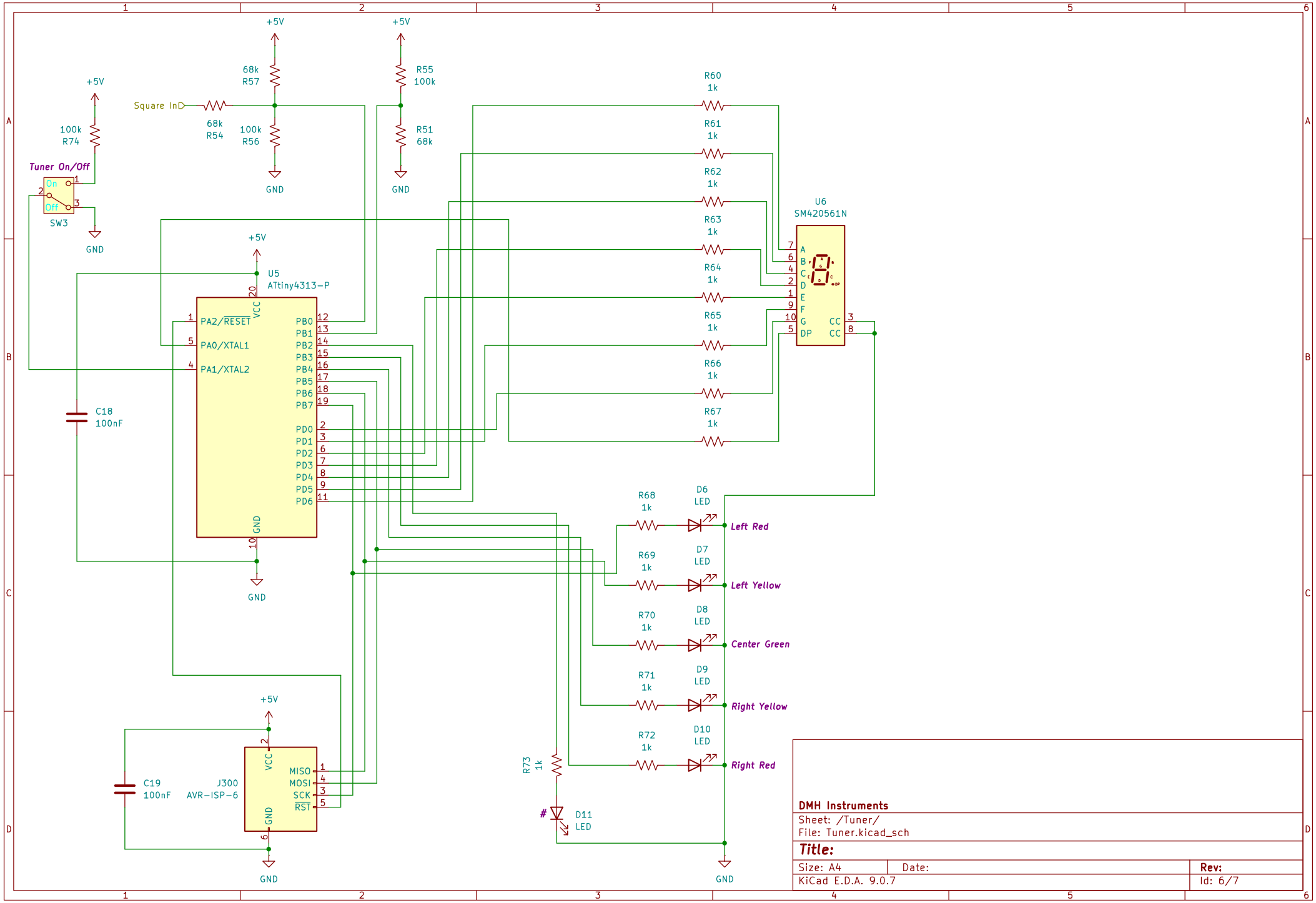
+5V
Square In
68k
R57
68k
R54
100k
R56
GND
R55
100k
R51
68k
100k
R74
Tuner On/Off
On
Off
SW3
U5
ATtiny4313-P
VCC
PA2/RESET
PA0/XTAL1
PA1/XTAL2
PB0
PB1
PB2
PB3
PB4
PB5
PB6
PB7
PD0
PD1
PD2
PD3
PD4
PD5
PD6
C18
100nF
U6
SM420561N
R60
1k
R61
1k
R62
1k
R63
1k
R64
1k
R65
1k
R66
1k
R67
1k
CC
R68
1k
D6
LED
Left Red
R69
1k
D7
LED
Left Yellow
R70
1k
D8
LED
Center Green
R71
1k
D9
LED
Right Yellow
R72
1k
D10
LED
Right Red
R73
1k
D11
LED
C19
100nF
J300
AVR-ISP-6
MISO
MOSI
SCK
RST
DMH Instruments
Sheet: /Tuner/
File: Tuner.kicad_sch
Title:
Size: A4
Date:
Rev:
KiCad E.D.A. 9.0.7
Id: 6/7

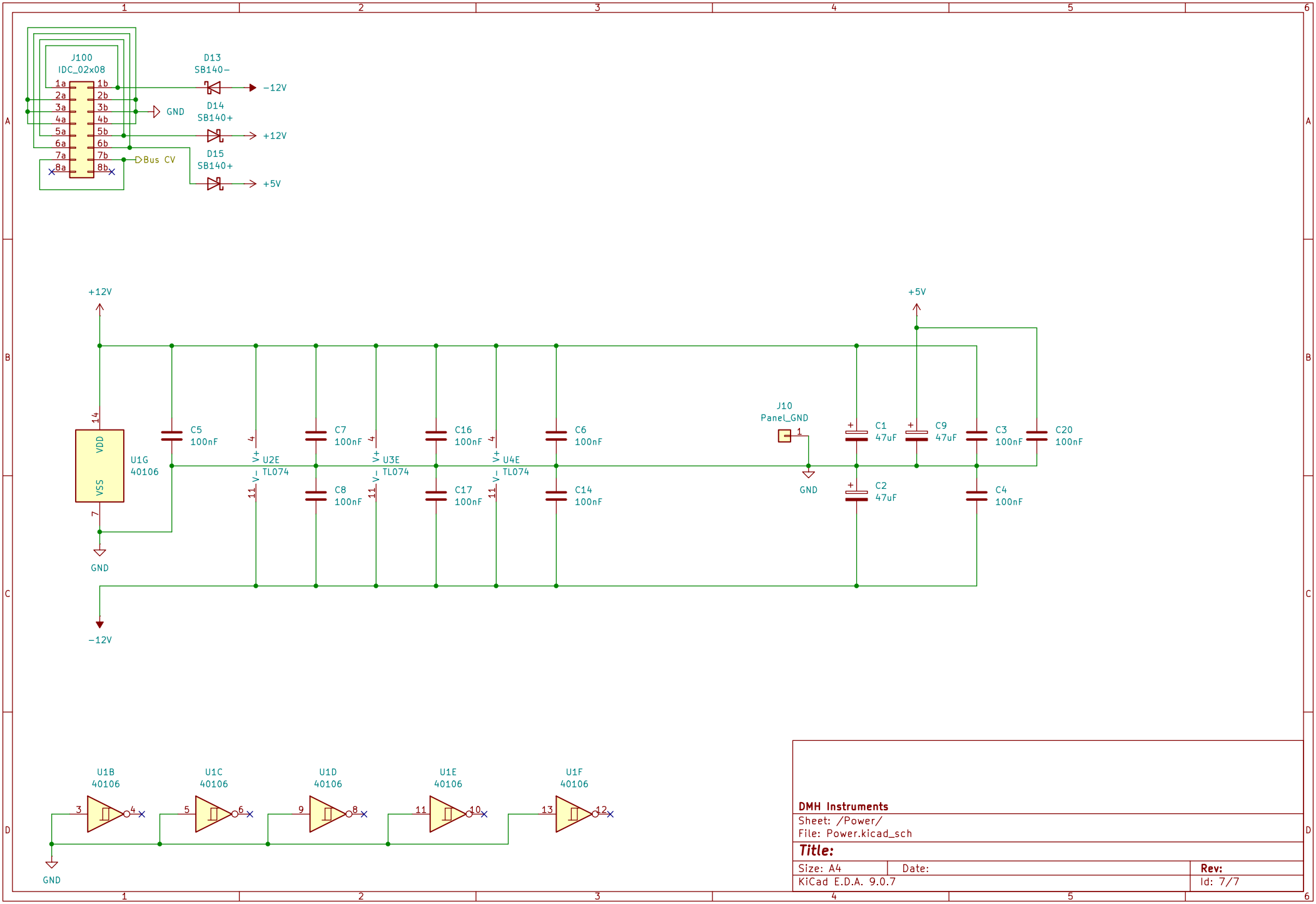

DMH Instruments

Sheet: /Power/

File: Power.kicad_sch

Title:

Size: A4	Date:	Rev:
KiCad E.D.A. 9.0.7		Id: 7/7